The University of Michigan
College of Engineering
Curriculum Committee

Agenda
March 18, 2003
1:30-3:30 p.m.
GM ROOM
Fourth Floor Lurie Engineering Center

Please Note—This Meeting Will End By 3:00 p.m. Since The Faculty Meeting Will Start Then

1. Approval of Minutes from March 4, 2003 Meeting

2. EE Degree Program Change – For Information Only

3. Course Approval Forms

University of Michigan
College of Engineering
Curriculum Committee Meeting
Tuesday March 4, 2003
1:30-3:00 p.m.
Lurie Engineering Center GM Room
Minutes

Armin Troesch called the meeting to order at 1:40 p.m.

Members Present: A. Troesch, V. Chung, W. Hansen, G. Herrin, J.Holloway, G.Hulbert, S.Montgomery, P. Samson, S. Takayama

Members Absent: J.Fessler (EECS), S. Pang, P. Friedmann (AERO), H. Peng, R. Robertson (MSE), G.Tyson (EECS)

Guests: Judy Hyde (MSE), Honor Passow

The minutes of the last meeting were approved

Question from Gary Herrin re: CoE Faculty Meetings

Gary Herrin questioned that since there hasn't been a quorum at the CoE Faculty Meetings lately has anything been voted on, or counted?
Armin Troesch said that what was to be voted on at the last meeting was a title change for Chem E 330, which was to go out as an electronic vote along with approval of the minutes. He said that he hasn't seen that yet.

NERS Program Changes – James Holloway

James Holloway passed out his proposal for the NERS required program. The NERS faculty approved this. They wanted this to be approved by the Curriculum Committee, and then to the College, all subject to the approval of the ME changes.

ME Thermal/Fluids/Heat Transfer Sequence – Discussion

Greg Hulbert said that one change proposed for ME 320. The request was made to not have ME 235 as a prerequisite the prerequisite still remains on the course. Armin Troesch noted that this is advised, not enforced. Armin said he would like to see a consensus developed on that issue, since when the transition was done, basically a free elective was lost. Does the Curriculum Committee have a policy on what the minimum number of free electives for a program should be?
Gary Herrin noted that the policy is 12. Armin said that the 12 credit hours included 3 hours of Chemistry and Physics so this is really 9 effective free electives. He suggested that 9 credit hours should be the minimum requirement of free electives across the College. - He noted that strong justification would be needed to go below 9 credit hours.

Data to Support Undergraduate Curricular Decision Making

Slide presentation by Jeanne Murabito and Honor Passow. A lot of this data was pulled by Keumsung Chung. Some of the topics covered were: **CoE College – Wide Assessment Efforts:**

Lead a process for developing, framing, and prioritizing questions that:

- Are important to CoE faculty
- Are timely in the current context of CoE
- Address critical aspects of curricular design and program design, and
- Can reasonably be addressed in light of available assessment expertise and budgets.

This presentation of CoE's 2002 Assessment Results is intended to:

1. **Provide date** to help departments answer this year's Guiding Questions for CoE Assessment – questions about Undergraduate Curricular Goals.
2. **Provide a model** for future question –driven assessment. As comfort with question-driven assessment increases, more faculty involvement in question development will be solicited.
3. **Generate interest** in question development for future assessment cycles.

Professional Outcome Reports – Brief Discussion

Jeanne Murabito noted that some people have asked for an extension on turning in the Professional Outcome Reports. Monday, March 10 is the final deadline for these reports. Jeanne said that whatever she has on that date will be posted on the Website.
Armin Troesch suggested giving a brief presentation of this at the next Faculty Meeting. Jeanne agreed to this.

Chemical Engineering Items – Information Only

Susan Montgomery had some information (which was included in the meeting packet) including: **CHEMICAL ENGINEERING DEPARTMENT TECHNICAL ELECTIVE REQUIREMENT -- For students who completed ChE 230 F'01 or later, ADVANCED SCIENCE ELECTIVES, BIOLOGY/LIFE SCIENCE REQUIREMENT – For students who completed ChE 230 F'01 or later,** and **Proposed ChE curriculum, Winter 2003.**
She noted that the Chem E department had made some small changes. They expanded the technical electives which had previously been 6 credits of which 2 had to be Engineering, and the other 4 could be Engineering or advanced Science classes.

Course Approvals

Armin Troesch called for a motion to approve the following courses. This was moved and seconded.
Motion Carried (approved)

AERO 536	New Course
BME 548	New Course
BME 556	Modification – Prerequisite added; Level of Credit Changed; Terms

	Changed.
CHE 487	Modification – Prerequisite Changed.
CEE 522	New Course
EECS 467 (Cross-Listed with ME 467 & MFG 467)	Deletion
EECS 568 (Cross-Listed with MFG 570	Deletion
ME 235	New Course
ME 320	New Course
ME 335	New Course
MSE 480 (Cross-Listed with MFG 480)	Modification – Changing Terms
MSE 489 (Cross-Listed with MFG 489)	Modification – Changing Terns
TECH COMM 400	Deletion
TECH COMM 450	Modification – Changed Course Description
TECH COMM 475	Deletion
TECH COMM 486	Deletion
TECH COMM 490	Deletion
TECH COMM 497	Deletion
TECH COMM 499	New Course

Armin Troesch announced that he is stepping down as Chairman of the CoE Curriculum Committee in June, and asked for any self nominations or nominations for others.

Adjournment: Motion to adjourn was made and seconded
Motion carried (approved)

Next Meeting
Tuesday, March 18, 2003
1:30-3:30 p.m.
GM Room-LEC

To: CoE Curr Comm
From: Jeff Fessler, EECS Curr Comm Chair
Re: EE Degree program change
Tue Mar 4 14:35:15 EST 2003

On 2003-3-4 the ECE faculty voted to make the following program change for the EE degree:

Require EECS 496 (Major Design Experience - Professionalism), 2 credits

This course is required by the CE and CS degrees and it will help us with ABET to require it for the EE degree and it will help the scheduling and coordination associated with TechComm 496 which is taken concurrently.

The EE degree program credits will be adjusted by
reducing Free Electives by 1 credit from 12 to 11 credits.
reducing Flexible Technical Electives by 1 credit from 11 to 10 credits.

In the current sample schedule, there is a 4 credit FreeElec and a 4 credit FlexTechElec course listed in the 8th semester.
We will simply reduce those to 3 credits in the sample schedule, and add EECS 496 to the 8th semester.
We will also modify the footnotes to clarify that EECS 496, TechComm 496, and the MDE course are to be taken concurrently, as is already the case for the CE and CS degrees.

This change will unify the TechComm and "professionalism" requirements across all of the EECS degrees.

Course Approval Forms

COURSE APPROVAL FORMS

Sub-Committee Review for March 18, 2003 CoE CC Meeting

EECS 496 Modification – Changing Title; Changing Description

IOE 452 (X-Listed with MFG 455) Modification – Changing Title; Changing Description; Changing Credit Hours

IOE 453 (X-Listed with Mfg 456) Modification – Changing Title; Changing Description; Adding Credit Restrictions (Credit Not Granted for Both IOE and IOE 366); Changing Credit Hours.

IOE 461(X-Listed with MFG 461) Modification – Adding Credit Restrictions (Not for Graduate Credit).

IOE 552 Modification – Adding X-Listing with Math 542; Changing Prerequisites from IOE 452 and 453 or Math 423 to IOE 453 or Math 423. Business School students: Fin 580 Or Fin 618 or BA 855.

IOE 553 Modification – Adding X-Listing with Math 543; Changing Prerequisites from IOE 452 and IOE 453 or Math 423 to IOE 552.

MSE 435 Modification – Changing Description; Changing Prerequisites from Math 216, MSE 150, or 220 or 250 to Math 216 and MSE 220 or 250; Changing Terms.

MSE 470 Modification – Changing Title.

ME 513 (X-Listed with AUTO and MFG) New Course

ME 583 (X-Listed with IOE 583,MFG 583 and EECS 583) Modification – Removing EECS X-Listing; Changing Title Abbreviation for Time Schedule and Transcript.

NAME 420(X-Listed with AOSS 420 and ENSCEN 420) Modification – Adding CEE 420 X-Listing.

THE UNIVERSITY OF MICHIGAN -- COLLEGE OF ENGINEERING
Course Approval Request
College Curriculum Committee, 1420 Lurie Engineering Center Building

Print

Form Number **1066**

Action Requested

○ New Course
◉ Modification of Existing Course
○ Deletion of Course

Complete the following sections:
New Courses - B & C completely
Modifications - A modified information, B & C completely
Deletions - A & C completely

Date 2/19/2003
Effective Fall 2003

A. CURRENT LISTING

Home Department	Div #	Course Number
EECS	252	496

Cross Listed Course Information:

X Course Title: Capstone Design Course in Computing

TITLE ABBREVIATION		
Time Sched Max = 19 Spaces	Capstone Des Comput
Transcript Max = 20 Spaces	Capstone Design Comp

X Course Description:
Capstone design course for seniors in computer science or computer engineering. Design principles for multidisciplinary team projects, team strategies, entrepreneurial skills, ethics, social and environmental awareness. Each student must take (simultaneously) Tech. Comm. 496 (2cr.) and one of the approved 400-level team project courses in computing (2-4 cr.).

PROGRAM OUTCOMES:
☐ a ☐ b ☒ c ☒ d ☒ e ☒ f ☒ g ☒ h ☒ i ☐ j ☐ k

Degree Requirements: ○ Degree Requirement ○ Tech Elective ◉ Core Course ○ Other ○ Free Elective

☐ Prerequisites: Senior standing ◉ Enforced ○ Advised

☐ Credit Restrictions:

☐ **Level of Credit**: ☒ Undergrad only ☐ All Credit types ☐ Rackham Grad ☐ Rckhm Grad w/add'l Work ☐ Non-Rckhm Grad ☐ Ugrad or Rckhm Grad ☐ Ugrad or Non-Rckhm Grad
Credit Hours: Min 2, Max 2
Contact Hrs/Wk 2
Number of Wks 14

C. Repeatability (Indi Research, Dir. Study, Dissertation:
Is this course repeatable? ○ Yes ◉ No
Maximum Hours? ____ Maximum Times? ____
Can it be repeated in the same term? ○ Yes ○ No

☐ **Class Type(s)**: ☒ Lec ☐ Rec ☐ Sem ☐ Lab ☐ Dis ☐ Ind ☐ Other ____
Graded Section: ◉ Lec ○ Rec ○ Sem ○ Lab ○ Dis ○ Ind ○ Other ____
Grading: ☒ A-E ☐ CR/NC ☐ S/U ☐ P/F ☐ Y
Location: ☒ Ann Arbor ☐ Biological Station ☐ Camp Davis ☐ Extension

B. REQUESTED LISTING

Home Department	Div #	Course Number
EECS	252	496

Cross Listed Course Information:

Course Title: Major Design Experience-Professionalism

TITLE ABBREVIATION	
Time Sched Max = 19 Spaces	Major Design / Prof
Transcript Max = 20 Spaces	Major Design / Prof

Course Description for Official Publication (Max = 50 words):
Design principles for multidisciplinary team projects, team strategies, entrepreneurial skills, ethics, social and environmental awareness, and life long learning. Each student must take (simultaneously) Tech Comm 496 (2 cr.) and one of the approved 400-level team project courses (4 cr.)

PROGRAM OUTCOMES:
☐ a ☐ b ☒ c ☒ d ☒ e ☒ f ☒ g ☒ h ☒ i ☐ j ☐ k

Degree Requirements: ○ Degree Requirement ○ Tech Elective ◉ Core Course ○ Other ○ Free Elective

Prerequisites: Senior Standing ◉ Enforced ○ Advised

Credit Restrictions:

Level of Credit: ☒ Undergrad only ☐ All Credit types ☐ Rackham Grad ☐ Rckhm Grad w/add'l Work ☐ Non-Rckhm Grad ☐ Ugrad or Rckhm Grad ☐ Ugrad or Non-Rckhm Grad
Credit Hours: Min 2, Max 2
Contact Hrs/Wk 2
Number of Wks 14

Printing Information (Optional): ☒ Print the course in the Bulletin ☒ Print the course in the Time Schedule

Terms & Freq. of Offering: ■ I ■ II ☐ IIIa ☐ IIIb ☐ III ■ Yearly ☐ Alter Years ☐ Even Years ☐ Odd Years
Half term ☐ 1st ☐ 2nd

Cognizant Faculty Member: Toby Teorey, Atul Prakash — Title: Professor, Assoc. Professor

Grad Course: Attach nomination if Cognizant Faculty is not a regular graduate faculty

Approval

☐ Curriculum Comm. _____
☐ Faculty _____
☐ Rackham _____
☐ Cross listed Unit 1 _____
☐ Cross listed Unit 2 _____

Submitted By: ■ Home Dept. ☐ Cross-listed Dept.
Name, Signature & Department
Home Dept. EECS Jeff Fessler Jeff Fessler 2003-3-4
Cross-listed Dept(s). _____

Form Number

1066

SUPPORTING STATEMENT

EECS 496 is a discussion class regarding professionalism not only in information technology, but engineering in general, with topics like ethics, statups, intellectual property, and team building. The new title reflects the true content of the course as it exists now. The changes to the description are minor, but remove any computing terminology so any major in the EECS department (EE, CE, or CS) can take it.

Approved by ECE faculty on 2003-3-4.
Approved by CSE faculty in Feb. 2003

Are any special resources or facilities required for this course? ☐ Yes ☐ No

Detail the Special requirements

THE UNIVERSITY OF MICHIGAN -- COLLEGE OF ENGINEERING
Course Approval Request
College Curriculum Committee, 1420 Lurie Engineering Center Building

Print

Form Number 1071

Action Requested

- ○ New Course
- ◉ Modification of Existing Course
- ○ Deletion of Course

Complete the following sections:
New Courses - B & C completely
Modifications - A modified information, B & C completely
Deletions - A & C completely

Date 3/6/2003
Effective Fall 2003

A. CURRENT LISTING	B. REQUESTED LISTING
Home Department:	Home Department: Industrial and Operations Engineering
Div #:	Div #: 272
Course Number:	Course Number: 452
Cross Listed Course Information:	Cross Listed Course Information: Program in Manufacturing
Div #:	Div #: 275
Course Number:	Course Number: 455
XX Course Title: CAPITAL BUDGETING	Course Title: CORPORATE FINANCE
TITLE ABBREVIATION — Time Sched Max = 19 Spaces: CAPITAL BUDGETING	TITLE ABBREVIATION — Time Sched Max = 19 Spaces: CORPORATE FINANCE
TITLE ABBREVIATION — Transcript Max = 20 Spaces: CAPITAL BUDGET	TITLE ABBREVIATION — Transcript Max = 20 Spaces: CORPORATE FINANCE
XX Course Description: The financial background for capital budgeting decisions is developed. Decisions with capital rationing, portfolio optimization, and rate selection are considered. Examples and cases are used to illustrate the capital asset pricing model and efficient market theory.	Course Description for Official Publication (Max = 50 words): The goal of this course is to introduce a basic understanding of financial management. The course develops fundamental models of valuation and investment from first principles and applies them to problems of corporate and individual decision-making. The topics of discussion will include the net present valuation, optimal portfolio selection, risk and investment analysis, issuing securities, capital structure with debt financing, and real options.
PROGRAM OUTCOMES: ☐a ☐b ☐c ☐d ☐e ☐f ☐g ☐h ☐i ☐j ☐k	**PROGRAM OUTCOMES:** ☒a ☒b ☒c ☐d ☒e ☒f ☒g ☒h ☒i ☒j ☒k
Degree Requirements ○ Degree Requirement ○ Free Elective ○ Other ○ Core Course ○ Tech Elective	**Degree Requirements** ○ Degree Requirement ○ Free Elective ○ Other ○ Core Course ○ Tech Elective
Prerequisites ○ Enforced ○ Advised	Prerequisites IOE 201 and IOE 310 and IOE 366 ○ Enforced ○ Advised
Credit Restrictions	Credit Restrictions
Level of Credit ☐ Undergrad only ☐ Ugrad or Non-Rckhm Grad ☐ Rackham Grad ☒ All Credit types ☐ Non-Rckhm Grad ☐ Rckhm Grad w/add'l Work ☐ Ugrad or Rckhm Grad	**Level of Credit** ☐ Undergrad only ☐ Ugrad or Non-Rckhm Grad ☐ Rackham Grad ☒ All Credit types ☐ Non-Rckhm Grad ☐ Rckhm Grad w/add'l Work ☐ Ugrad or Rckhm Grad
Credit Hours Min 2 Max 2	Credit Hours Min 3 Max 3
Contact Hrs/Wk 4	Contact Hrs/Wk 3
Number of Wks 7	Number of Wks 14
C. Repeatability (Indi Research, Dir. Study, Dissertation): Is this course repeatable? ○ Yes ◉ No Maximum Hours? ____ Maximum Times? ____ Can it be repeated in the same term? ○ Yes ○ No	**Printing Information (Optional)** ☒ Print the course in the Bulletin ☒ Print the course in the Time Schedule
Class Type(s) ☒ Lec ☐ Rec ☐ Sem ☐ Lab ☐ Dis ☐ Ind ☐ Other ____ **Graded Section** ◉ Lec ○ Rec ○ Sem ○ Lab ○ Dis ○ Ind ○ Other **Grading** ☒ A-E ☐ CR/NC ☐ S/U ☐ P/F ☐ Y **Location** ☒ Ann Arbor ☐ Biological Station ☐ Camp Davis ☐ Extension	Terms & Freq. of Offering ■ I ☐ II ☐ IIIa ☐ IIIb ☐ III ■ Yearly ☐ Alter Years ☐ Even Years ☐ Odd Years Half term ☐ 1st ☐ 2nd
	Cognizant Faculty Member: Jussi Keppo **Title** Asst. Professor
	Grad Course: Attach nomination if Cognizant Faculty is not a regular graduate faculty

Approval

- ☐ Curriculum Comm. _____
- ☐ Faculty _____
- ☐ Rackham _____
- ☐ Cross listed Unit 1 _____
- ☐ Cross listed Unit 2 _____

Submitted By: ■ Home Dept. ☐ Cross-listed Dept.
Name, Signature & Department
Home Dept. [IOE]
Cross-listed Dept(s). [MFG]

Form Number

1071

SUPPORTING STATEMENT

This course is being changed from a half-term 2 credit class to a full term 3 credit class. We have changed the course title and description to reflect this change.

Are any special resources or facilities required for this course? ☐ Yes ☐ No

Detail the Special requirements

IOE 452 – Capital Budgeting, 3 credits

Intructor

Dohyun Pak
Email: pakd@umich.edu
Office: Room 2812 IOE Building
Office hours: Monday 1:30-3:30 pm
Homepage: http://www-personal.engin.umich.edu/~pakd/

GSI

Wanshan Zhu
Email: zhuws@engin.umich.edu
Office: Room 2823 IOE Building
Office hour: Tuesday 11-12 am (1018 Dow), 3-4 pm (2166 Dow), by appointment

Outline

The goal of this course is to introduce a basic understanding of financial management. The course develops fundamental models of valuation and investment from first principles and applies them to problems of corporate and individual decision-making. The topics of discussion will include the Net Present valuation, Optimal Portfolio Selection, Risk and Investment analysis, Issuing Securities, Capital Structure with Debt Financing, and Real Options.

Course Material

Brealey, R. A. and Myers, S.C.: Principles of Corporate Finance, 6th (or 7th) edition, McGraw-Hill.

Lectures

Monday, Wednesday 10-12 am, **1610 IOE Building**.

Review Session

Tuesday 4-5 pm, G906 Cooley

Course Policies

1) Every homework will be graded based on 100 points. Homework is due at the beginning of class (10:10am) or before, otherwise it will be considered late. Late homework will be penalized 20 points for each day it is turned in late.

2) Students must take examinations at the scheduled time. Make-up examination will be offered only under unusual and unavoidable circumstances. All make-up examinations must be scheduled with the instructor at least 1 week prior to the examination date. No

one will be excused from taking any examination. All the exams are in-class, closed book and closed notes exams.

3) Working together on homework problems is allowed and encouraged, but the write-up of the assignments *must be done individually.* Students are bound by the **Engineering Council Honor code.**

4) If you believe an exam question was graded in error and wish to have the exam regraded, you must **submit the exam to the GSI together with a written explanation for requesting the regrade**. This must be done **within one week from the date the exam was returned**. Be aware that an exam that is regraded will result in **all of the graded problems being regraded** so that you may lose or gain points by resubmitting.

Grading

Exam 60% (midterm 25% and final 35%), homework 20%, case study 20%.

Prerequisites

IOE 301/201, 315, 365/265, 310

Honor Code

All students are expected to be familiar with the **College of Engineering Honor Code** and are bound by its requirements. (http://honor.personal.engin.umich.edu/). When a student is suspected of violating the COE Honor Code, the investigation by honor council can begin without warning.

Schedule

Week	*Topic*	*Chapters*
1	Introduction, Present values	1, 2, 3.1 - 3.4
2	Security Valuation- Bond and Stock	3.5, 4
3	Capital Budgeting	5
4	Practice of Capital Budgeting	6
5	Risk and Return	7
6	CAPM, Cost of Capital	8.1 – 8.3, 9.1 – 9.3
7	Midterm, Review	
8	Overview of corporate financing, IPO	14, 15
9	Debt Policy	17, 18
10	Capital Structure, Financing and Valuation	19
11	Understanding Options	20, 21
12	Real Options in Corporate finance	22
13	Real Options	22
14	Warrants and convertibles	23
15	Final Exam, Review	

THE UNIVERSITY OF MICHIGAN -- COLLEGE OF ENGINEERING
Course Approval Request
College Curriculum Committee, 1420 Lurie Engineering Center Building

Print

Form Number 1073

Action Requested

- ○ New Course
- ◉ Modification of Existing Course
- ○ Deletion of Course

Complete the following sections:
New Courses - B & C completely
Modifications - A modified information, B & C completely
Deletions - A & C completely

Date 3/7/2003
Effective Fall 2003

A. CURRENT LISTING			B. REQUESTED LISTING		
Home Department	Div #	Course Number	Home Department	Div #	Course Number
			Industrial and Operations Engineering	272	453
Cross Listed Course Information			Cross Listed Course Information		
			Program in Manufacturing	275	456
Course Title			Course Title		
FINANCIAL ENGINEERING			DERIVATIVE INSTRUMENTS		
TITLE ABBREVIATION — Time Sched Max = 19 Spaces		FINANCIAL ENGIN	TITLE ABBREVIATION — Time Sched Max = 19 Spaces		DERIVATIVE INSTRUMENTS
TITLE ABBREVIATION — Transcript Max = 20 Spaces		FINANCIAL ENGIN	TITLE ABBREVIATION — Transcript Max = 20 Spaces		DERIVATIVE INSTRUMENTS

Course Description
The tools, methodology, and basic theory of financial engineering is developed. Decisions involving option pricing, hedging with futures, asset-liability, matching, and structuring synthetic securities are considered and illustrated with examples and cases.

Course Description for Official Publication (Max = 50 words)
The main objectives of the course are first, to provide the students with a thorough understanding of the theory of pricing derivatives in the absence of arbitrage, and second, to develop the mathematical and numerical tools necessary to calculate derivative security prices. We begin by exploring the implications of the absence of static arbitrage. We study, for instance, forward and futures contracts. We proceed to develop the implications of no arbitrage in dynamic trading models: the binomial and Black-Scholes models. The theory is applied to hedging and risk management.

PROGRAM OUTCOMES:

A	B	C	D	E	F	G	H	I	J	K
☐	☐	☐	☐	☐	☐	☐	☐	☐	☐	☐

Degree Requirements ○ Degree Requirement ○ Free Elective ○ Other ○ Core Course ○ Tech Elective

Prerequisites ○ Enforced ○ Advised

Credit Restrictions

Level of Credit
☐ Undergrad only ☐ Ugrad or Non-Rckhm Grad
☐ Rackham Grad ☐ All Credit types
☐ Non-Rckhm Grad ☐ Rckhm Grad w/add'l Work
☐ Ugrad or Rckhm Grad

Credit Hours Min 2 Max 2
Contact Hrs/Wk 4
Number of Wks 7

C.
Repeatability (Indi Research, Dir. Study, Dissertation:
Is this course repeatable? ○ Yes ◉ No
Maximum Hours? ____ Maximum Times? ____
Can it be repeated in the same term? ○ Yes ○ No

Class Type(s) ☒ Lec ☐ Rec ☐ Sem ☐ Lab ☐ Dis ☐ Ind ☐ Other ____
Graded Section ◉ Lec ○ Rec ○ Sem ○ Lab ○ Dis ○ Ind ○ Other
Grading ☒ A-E ☐ CR/NC ☐ S/U ☐ P/F ☐ Y
Location ☒ Ann Arbor ☐ Biological Station ☐ Camp Davis ☐ Extension

Approval
☐ Curriculum Comm. ____
☐ Faculty ____
☐ Rackham ____
☐ Cross listed Unit 1 ____
☐ Cross listed Unit 2 ____

PROGRAM OUTCOMES:

A	B	C	D	E	F	G	H	I	J	K
☒	☒	☒	☒	☒	☒	☒	☒	☒	☒	☒

Degree Requirements ○ Degree Requirement ○ Free Elective ○ Other ○ Core Course ○ Tech Elective

Prerequisites IOE 201 and IOE 310 and IOE 366 ○ Enforced ○ Advised

Credit Restrictions CREDIT NOT GRANTED FOR BOTH IOE 453/MFG 456 AND MATH 423.

Level of Credit
☐ Undergrad only ☐ Ugrad or Non-Rckhm Grad
☐ Rackham Grad ☒ All Credit types
☐ Non-Rckhm Grad ☐ Rckhm Grad w/add'l Work
☐ Ugrad or Rckhm Grad

Credit Hours Min 3 Max 3
Contact Hrs/Wk 3
Number of Wks 14

Printing Information (Optional) ☒ Print the course in the Bulletin ☒ Print the course in the Time Schedule

Terms & Freq. of Offering ☐ I ☒ II ☐ IIIa ☐ IIIb ☐ III ☒ Yearly ☐ Alter Years ☐ Even Years ☐ Odd Years
Half term ☐ 1st ☐ 2nd

Cognizant Faculty Member: Jussi Keppo **Title** Asst. Professor

Grad Course: Attach nomination if Cognizant Faculty is not a regular graduate faculty

Submitted By: ☒ Home Dept. ☐ Cross-listed Dept.
Name, Signature & Department
Home Dept. [IOE]
Cross-listed Dept(s). [MFG] [signature] on behalf of Jack Lin

Form Number

1073

SUPPORTING STATEMENT

This course is being changed from a half-term 2 credit class to a full term 3 credit class. We have changed the course title and description to reflect this change. The credit restriction was added because there is too much overlap in content with Math 423.

Are any special resources or facilities required for this course? ☐ Yes ☒ No

Detail the Special requirements

IOE 453 – Introduction to Financial Engineering, 3 credits

Lecturer

Dohyun Pak
Email: pakd@umich.edu
Office: Room 2812 IOE Building
Office hours: Monday 1:30-3:30 pm, by appointment
Homepage: http://www-personal.engin.umich.edu/~pakd/

GSI

Wanshan Zhu
Email: zhuws@engin.umich.edu
Office: Room 2823 IOE Building
Office hour: Tuesday 11-12 am (1018 Dow), 3-4 pm (2166 Dow), by appointment

Outline

The main objectives of the course are first, to provide the students with a thorough understanding of the theory of pricing derivatives in the absence of arbitrage, and second, to develop the mathematical and numerical tools necessary to calculate derivative security prices. We begin by exploring the implications of the absence of static arbitrage. We study, for instance, forward and futures contracts. We proceed to develop the implications of no arbitrage in dynamic trading models: the binomial and Black-Scholes models. The theory is applied to hedging and risk management.

Course Material

Hull, J.C.: Options, Futures, and Other Derivative Securities, Fifth Edition, 2003, Prentice-Hall

Lectures

Monday, Wednesday 10-12 am, **1610 IOE Building**.

Review Session

Tuesday 4-5 pm, G906 Cooley

Course Policies

1) Every homework will be graded based on 100 points. Homework is due at the beginning of class (10:10am) or before, otherwise it will be considered late. Late homework will be penalized 20 points for each day it is turned in late.

2) Students must take examinations at the scheduled time. Make-up examination will be offered only under unusual and unavoidable circumstances. All make-up examinations must be scheduled with the instructor at least 1 week prior to the examination date. No

one will be excused from taking any examination. All the exams are in-class, closed book and closed notes exams.

3) Working together on homework problems is allowed and encouraged, but the write-up of the assignments *must be done individually.* Students are bound by the **Engineering Council Honor code.**

4) If you believe an exam question was graded in error and wish to have the exam regraded, you must **submit the exam to the GSI together with a written explanation for requesting the regrade**. This must be done **within one week from the date the exam was returned**. Be aware that an exam that is regraded will result in **all of the graded problems being regraded** so that you may lose or gain points by resubmitting.

Grading
Exam 70% (midterm 30% and final 40%), homework 30%

Prerequisites
IOE 301/201, 452

Honor Code

All students are expected to be familiar with the **College of Engineering Honor Code** and are bound by its requirements. (http://honor.personal.engin.umich.edu/). When a student is suspected of violating the COE Honor Code, the investigation by honor council can begin without warning.

Schedule

Week	*Topic*	*Chapters*
1	Introduction to derivative securities	1, 2
2	Pricing of forward and futures	3, 4.1 – 4.4
3	Interest rate futures	4.4 – 5
4	Options Markets	6
5	Properties of Stock Option Prices	7, 8
6	Trading strategies involving options	8, 9
7	Midterm, Review	
8	Black-Scholes Analysis	10, 11
9	General Derivative pricing	11, 12
10	The Greeks	13
11	Value at Risk	14
12	Estimating Volatilities, Numerical Procedure	15, 16
13	Numerical Procedure, Volatility	16
14	Final Exam (Cumulative), Review	

Math 423 Mathematics of Finance

- ***Prerequisites*** Math 217, Math 425 and EECS 183 or equivalents
- ***Frequency*** Fall (I), Winter (II)
- ***Student Body:*** Junior and senior Mathematics majors; some Business
- ***Credit:*** 3 Credits.
- ***Recent Texts:*** Investments (Kane, Marcus, Bodie), Options, Futures and Other Derivative Securities (Hull)
- ***Past Instructors:*** J. Conlon
- ***Background and Goals:*** This course is an introduction to the mathematical models used in finance and economics with particular emphasis on models for pricing derivative instruments such as options and futures. The goal is to understand how the models derive from basic principles of economics, and to provide the necessary mathematical tools for their analysis. A solid background in basic probability theory is necessary.
- ***Content:*** Topics include risk and return theory, portfolio theory, capital asset pricing model, random walk model, stochastic processes, Black-Scholes Analysis, numerical methods and interest rate models.
- ***Alternatives:*** none
- ***Subsequent Courses:*** Math 523 (Risk Theory) and Math 623 (Computational Finance).

THE UNIVERSITY OF MICHIGAN -- COLLEGE OF ENGINEERING
Course Approval Request
College Curriculum Committee, 1420 Lurie Engineering Center Building

Print

Form Number 1052

Action Requested

- ○ New Course
- ◉ Modification of Existing Course
- ○ Deletion of Course

Complete the following sections:
New Courses - B & C completely
Modifications - A modified information, B & C completely
Deletions - A & C completely

Date 2/10/2003
Effective Fall 2003

A. CURRENT LISTING

Home Department	Div #	Course Number

Cross Listed Course Information

Course Title

TITLE ABBREVIATION		
	Time Sched Max = 19 Spaces	
	Transcript Max = 20 Spaces	

Course Description

PROGRAM OUTCOMES:
☐ a ☐ b ☐ c ☐ d ☐ e ☐ f ☐ g ☐ h ☐ i ☐ j ☐ k

Degree Requirements ○ Degree Requirement ○ Free Elective ○ Other ○ Core Course ○ Tech Elective

Prerequisites ○ Enforced ○ Advised

XX Credit Restrictions

Level of Credit
☐ Undergrad only ☐ Ugrad or Non-Rckhm Grad
☐ Rackham Grad ☐ All Credit types
☐ Non-Rckhm Grad ☐ Rckhm Grad w/add'l Work
☐ Ugrad or Rckhm Grad

Credit Hours Min ____ Max ____
Contact Hrs/Wk ____
Number of Wks ____

C. Repeatability (Indi Research, Dir. Study, Dissertation:
Is this course repeatable? ○ Yes ○ No
Maximum Hours? ____ Maximum Times? ____
Can it be repeated in the same term? ○ Yes ○ No

Class Type(s) ☐ Lec ☐ Rec ☐ Sem ☐ Lab ☐ Dis ☐ Ind ☐ Other ____
Graded Section ○ Lec ○ Rec ○ Sem ○ Lab ○ Dis ○ Ind ○ Other
Grading ☐ A-E ☐ CR/NC ☐ S/U ☐ P/F ☐ Y
Location ☐ Ann Arbor ☐ Biological Station ☐ Camp Davis ☐ Extension

Approval
☐ Curriculum Comm. ____
☐ Faculty ____
☐ Rackham ____
☐ Cross listed Unit 1 ____
☐ Cross listed Unit 2 ____

B. REQUESTED LISTING

Home Department	Div #	Course Number
Industrial and Operations Engineering	272	461

Cross Listed Course Information

Manufacturing	275	461

Course Title
Quality Engineering Principles and Analysis

TITLE ABBREVIATION		
	Time Sched Max = 19 Spaces	Quality Engin Prin
	Transcript Max = 20 Spaces	Quality Engin Prin

Course Description for Official Publication (Max = 50 words)
This course provides students with the analytical and management tools necessary to solve manufacturing quality problems and implement effective quality systems. Topics include voice of the customer analysis, the Six Sigma problem solving methodology, process capability analysis, measurement system analysis, design of experiments, statistical process control, failure mode and effects analysis, quality function deployment and reliability analysis.

PROGRAM OUTCOMES:
☒ a ☒ b ☒ c ☐ d ☒ e ☐ f ☐ g ☐ h ☐ i ☐ j ☒ k

Degree Requirements ○ Degree Requirement ○ Free Elective ○ Other ○ Core Course ○ Tech Elective

Prerequisites IOE 366 ○ Enforced ◉ Advised

Credit Restrictions NOT FOR IOE GRADUATE CREDIT.

Level of Credit
☐ Undergrad only ☒ Ugrad or Non-Rckhm Grad
☐ Rackham Grad ☐ All Credit types
☐ Non-Rckhm Grad ☐ Rckhm Grad w/add'l Work
☒ Ugrad or Rckhm Grad

Credit Hours Min 4 Max 4
Contact Hrs/Wk 4
Number of Wks 13

Printing Information (Optional) ☒ Print the course in the Bulletin ☒ Print the course in the Time Schedule

Terms & Freq. of Offering ■ I ☐ II ☐ IIIa ☐ IIIb ☐ III ■ Yearly ☐ Alter Years ☐ Even Years ☐ Odd Years
Half term ☐ 1st ☐ 2nd

Cognizant Faculty Member: Gary D. Herrin **Title** Professor

Grad Course: Attach nomination if Cognizant Faculty is not a regular graduate faculty

Submitted By: ☐ Home Dept. ☐ Cross-listed Dept.
Name, Signature & Department
Home Dept. [IOE
Cross-listed Dept(s). [Mfg

Form Number

1052

SUPPORTING STATEMENT

This course is designed for undergraduates and for graduates who are not in the IOE graduate program and graduate distance learning students.

Are any special resources or facilities required for this course? ☐ Yes ☐ No

Detail the Special requirements

THE UNIVERSITY OF MICHIGAN -- COLLEGE OF ENGINEERING
Course Approval Request
College Curriculum Committee, 1420 Lurie Engineering Center Building

Print

Form Number 1057

Action Requested

○ New Course
◉ Modification of Existing Course
○ Deletion of Course

Complete the following sections:
New Courses - B & C completely
Modifications - A modified information, B & C completely
Deletions - A & C completely

Date 2/10/2003
Effective Fall 2003

	A. CURRENT LISTING	B. REQUESTED LISTING
	Home Department / Div # / Course Number	Home Department / Div # / Course Number
XX	Industrial and Operations Engineering / 272 / 552	Industrial and Operations Engineering / 272 / 552
	Cross Listed Course Information	Cross Listed Course Information: Mathematics / 428 / 542
☐	Course Title	Course Title: FINANCIAL ENGINEERING I
	TITLE ABBREVIATION — Time Sched Max = 19 Spaces	FINANCIAL ENGINEERING I
	TITLE ABBREVIATION — Transcript Max = 20 Spaces	FINANCIAL ENGINEERING I
☐	Course Description	Course Description for Official Publication (Max = 50 words): Theory and applications to financial engineering. Designing, structuring and pricing financial engineering products (including options, future, swaps and other derivative securities) and their applications to financial and investment risk management. Mathematical methodology that forms the basis of financial engineering, applied stochastic processes and numerical methods in particular.

PROGRAM OUTCOMES:

A. CURRENT LISTING	B. REQUESTED LISTING
☐ a ☐ b ☐ c ☐ d ☐ e ☐ f ☐ g ☐ h ☐ i ☐ j ☐ k	☐ a ☐ b ☐ c ☐ d ☐ e ☐ f ☐ g ☐ h ☐ i ☐ j ☐ k
Degree Requirements ○ Degree Requirement ○ Free Elective ○ Other ○ Core Course ○ Tech Elective	**Degree Requirements** ○ Degree Requirement ○ Free Elective ○ Other ○ Core Course ○ Tech Elective
XX Prerequisites: IOE 452 and 453 or Math 423 ○ Enforced ○ Advised	Prerequisites: IOE 453 or Math 423. Business School students: Fin 580 or Fin 618 or BA 855 ◉ Enforced ○ Advised
☐ Credit Restrictions	Credit Restrictions
☐ **Level of Credit**: ☐ Undergrad only ☐ Ugrad or Non-Rckhm Grad ☐ Rackham Grad ☐ All Credit types ☐ Non-Rckhm Grad ☐ Rckhm Grad w/add'l Work ☐ Ugrad or Rckhm Grad; Credit Hours Min Max; Contact Hrs/Wk; Number of Wks	**Level of Credit**: ☐ Undergrad only ☐ Ugrad or Non-Rckhm Grad ☒ Rackham Grad ☐ All Credit types ☒ Non-Rckhm Grad ☐ Rckhm Grad w/add'l Work ☐ Ugrad or Rckhm Grad; Credit Hours Min 3 Max 3; Contact Hrs/Wk 3; Number of Wks 14

C.

Repeatability (Indi Research, Dir. Study, Dissertation):
Is this course repeatable? ○ Yes ○ No
Maximum Hours? ____ Maximum Times? ____
Can it be repeated in the same term? ○ Yes ○ No

Printing Information (Optional): ☒ Print the course in the Bulletin ☒ Print the course in the Time Schedule

☐ **Class Type(s)**: ☐ Lec ☐ Rec ☐ Sem ☐ Lab ☐ Dis ☐ Ind ☐ Other ____
Graded Section: ○ Lec ○ Rec ○ Sem ○ Lab ○ Dis ○ Ind ○ Other
Grading: ☐ A-E ☐ CR/NC ☐ S/U ☐ P/F ☐ Y
Location: ☐ Ann Arbor ☐ Biological Station ☐ Camp Davis ☐ Extension

Terms & Freq. of Offering: ☒ I ☒ II ☐ IIIa ☐ IIIb ☐ III ☒ Yearly ☐ Alter Years ☐ Even Years ☐ Odd Years
Half term ☐ 1st ☐ 2nd

Cognizant Faculty Member: Jussi Keppo, Mattias Jonsson — Title: Asst. Professor, Asst Professor

Grad Course: Attach nomination if Cognizant Faculty is not a regular graduate faculty

Approval
☐ Curriculum Comm.
☐ Faculty
☐ Rackham
☐ Cross listed Unit 1
☐ Cross listed Unit 2

Submitted By: ☒ Home Dept. ☐ Cross-listed Dept.
Name, Signature & Department
Home Dept. [IOE]
Cross-listed Dept(s). [Math]

Form Number

1057

SUPPORTING STATEMENT

Although the majority of the current students in IOE 552 are in the Financial Engineering program, the course is also of interest to Math Department graduate students in the Mathematics of Finance program. These Math grad students usually prefer to have a Math course listed on their transcript. The course content is mathematical.

The instructor of the course will come from either IOE or the Math Department as it is in Fall 2002 and Winter 2003.

This prerequisite change more accurately reflects necessary preparation for students of different departments who elect this class in the Financial Engineering Program.

Are any special resources or facilities required for this course? ☐ Yes ☐ No

Detail the Special requirements

THE UNIVERSITY OF MICHIGAN -- COLLEGE OF ENGINEERING
Course Approval Request
College Curriculum Committee, 1420 Lurie Engineering Center Building

Print

Form Number 1058

Action Requested

- ○ New Course
- ◉ Modification of Existing Course
- ○ Deletion of Course

Complete the following sections:
New Courses - B & C completely
Modifications - A modified information, B & C completely
Deletions - A & C completely

Date 2/10/2003
Effective Fall 2003

	A. CURRENT LISTING			B. REQUESTED LISTING		
	Home Department	Div #	Course Number	Home Department	Div #	Course Number
XX	Industrial and Operations Engineering	272	553	Industrial and Operations Engineering	272	553
	Cross Listed Course Information			Cross Listed Course Information		
				Mathematics	248	543
☐	Course Title			Course Title: FINANCIAL ENGINEERING II		
	TITLE ABBREVIATION — Time Sched Max = 19 Spaces			TITLE ABBREVIATION — Time Sched Max = 19 Spaces: FINANCIAL ENGINEERING II		
	TITLE ABBREVIATION — Transcript Max = 20 Spaces			TITLE ABBREVIATION — Transcript Max = 20 Spaces: FINANCIAL ENGINEERING II		
☐	Course Description			Course Description for Official Publication (Max = 50 words): Advanced issues in financial engineering: stochastic interest rate modeling and fixed income markets, derivatives trading and arbitrage, international finance, risk management methodologies including Value-at-Risk and credit risk. Multivariate stochastic calculus methodology in fiance: multivariate Ito's lemma, Ito's stochastic integrals, the Feynman-Kac theorem and Girsanov's theorem.		

PROGRAM OUTCOMES:

A. CURRENT LISTING	B. REQUESTED LISTING
☐ a ☐ b ☐ c ☐ d ☐ e ☐ f ☐ g ☐ h ☐ i ☐ j ☐ k	☐ a ☐ b ☐ c ☐ d ☐ e ☐ f ☐ g ☐ h ☐ i ☐ j ☐ k
Degree Requirements ○ Degree Requirement ○ Free Elective ○ Other ○ Core Course ○ Tech Elective	**Degree Requirements** ○ Degree Requirement ○ Free Elective ○ Other ○ Core Course ○ Tech Elective
XX Prerequisites IOE 452 and IOE 453 or Math 423 ○ Enforced ○ Advised	Prerequisites IOE 552 ◉ Enforced ○ Advised
☐ Credit Restrictions	Credit Restrictions
Level of Credit ☐ Undergrad only ☐ Ugrad or Non-Rckhm Grad ☐ Rackham Grad ☐ All Credit types ☐ Non-Rckhm Grad ☐ Rckhm Grad w/add'l Work ☐ Ugrad or Rckhm Grad	**Level of Credit** ☐ Undergrad only ☐ Ugrad or Non-Rckhm Grad ☒ Rackham Grad ☐ All Credit types ☒ Non-Rckhm Grad ☐ Rckhm Grad w/add'l Work ☐ Ugrad or Rckhm Grad
Credit Hours Min Max	Credit Hours Min 3 Max 3
Contact Hrs/Wk ____ Number of Wks ____	Contact Hrs/Wk 3 Number of Wks 14

C.

Repeatability (Indi Research, Dir. Study, Dissertation:
Is this course repeatable? ○ Yes ○ No
Maximum Hours? ____ Maximum Times? ____
Can it be repeated in the same term? ○ Yes ○ No

Printing Information (Optional)
☒ Print the course in the Bulletin
☒ Print the course in the Time Schedule

☐ **Class Type(s)**: ☐ Lec ☐ Rec ☐ Sem ☐ Lab ☐ Dis ☐ Ind ☐ Other ____

Graded Section: ○ Lec ○ Rec ○ Sem ○ Lab ○ Dis ○ Ind ○ Other

Grading: ☐ A-E ☐ CR/NC ☐ S/U ☐ P/F ☐ Y

Location: ☐ Ann Arbor ☐ Biological Station ☐ Camp Davis ☐ Extension

Terms & Freq. of Offering: ☒ I ☒ II ☐ IIIa ☐ IIIb ☐ III — ☒ Yearly ☐ Alter Years ☐ Even Years ☐ Odd Years
Half term ☐ 1st ☐ 2nd

Cognizant Faculty Member: Jussi Keppo, Asst. Professor; Mattias Jonsson, Asst. Professor

Grad Course: Attach nomination if Cognizant Faculty is not a regular graduate faculty

Approval

- ☐ Curriculum Comm. ____
- ☐ Faculty ____
- ☐ Rackham ____
- ☐ Cross listed Unit 1 ____
- ☐ *Cross listed Unit 2* ____

Submitted By: ☒ Home Dept. ☐ Cross-listed Dept.
Name, Signature & Department

Home Dept. [IOE
Cross-listed Dept(s). [Math

Form Number

1058

SUPPORTING STATEMENT

Although the majority of the current students in IOE 553 are in the Financial Engineering program, the course is also of interest to Math Department graduate students in the Mathematics of Finance program. The course content is mathematical.

The instructor of the course can come from either IOE or the Math Department.

This prerequisite change more accurately reflects the necessary preparation for students of different departments/colleges who elect this class in the Financial Engineering Program.

Are any special resources or facilities required for this course? ☐ Yes ☐ No

Detail the Special requirements

THE UNIVERSITY OF MICHIGAN -- COLLEGE OF ENGINEERING
Course Approval Request
College Curriculum Committee, 1420 Lurie Engineering Center Building

Print

Form Number 1065

Action Requested

○ New Course
◉ Modification of Existing Course
○ Deletion of Course

Complete the following sections:
New Courses - B & C completely
Modifications - A modified information, B & C completely
Deletions - A & C completely

Date 2/18/2003
Effective Winter 2004

A. CURRENT LISTING

Home Department	Div #	Course Number
Materials Science & Engineering	281	435

Cross Listed Course Information:

Course Title: Kinetics and Transport in Materials Engineering

TITLE ABBREVIATION		
Time Sched Max = 19 Spaces	Kin. and Transport
Transcript Max = 20 Spaces	Kin & Transp.

Course Description:
Principles of reaction kinetics. Fluid, energy, and mass transport with applications to materials systems.

PROGRAM OUTCOMES:
☐ a ☐ b ☐ c ☐ d ☐ e ☐ f ☐ g ☐ h ☐ i ☐ j ☐ k

Degree Requirements: O Degree Requirement O Tech Elective O Core Course O Other O Free Elective

Prerequisites: Math 216, MSE 150, or 220 or 250
O Enforced O Advised

Credit Restrictions:

Level of Credit: ☐ Undergrad only ☐ Rackham Grad ☐ Non-Rckhm Grad ☒ Ugrad or Rckhm Grad ☐ Ugrad or Non-Rckhm Grad ☐ All Credit types ☐ Rckhm Grad w/add'l Work

Credit Hours: Min 4 Max 4

Contact Hrs/Wk 4
Number of Wks 14

C. Repeatability (Indi Research, Dir. Study, Dissertation:
Is this course repeatable? O Yes O No
Maximum Hours? ____ Maximum Times? ____
Can it be repeated in the same term? O Yes O No

Class Type(s): ☒ Lec ☐ Rec ☐ Sem ☐ Lab ☐ Dis ☐ Ind ☐ Other ____

Graded Section: ⊙ Lec ○ Rec ○ Sem ○ Lab ○ Dis ○ Ind ○ Other

Grading: ☒ A-E ☐ CR/NC ☐ S/U ☐ P/F ☐ Y

Location: ☒ Ann Arbor ☐ Biological Station ☐ Camp Davis ☐ Extension

B. REQUESTED LISTING

Home Department	Div #	Course Number
Materials Science & Engineering MATSCIE	281	435

Cross Listed Course Information:

Course Title: Kinetics and Transport in Materials Engineering

TITLE ABBREVIATION		
Time Sched Max = 19 Spaces	Kin. and Transport
Transcript Max = 20 Spaces	Kin & Transp.

Course Description for Official Publication (Max = 50 words)
Application of basic principles of molecular transport and mass, energy, and momentum balance to the solution of heat, diffusion, and fluid flow problems relevant to materials processing. Introduction to radiative heat transfer. Empirical approaches to and dimensional analysis of complex transport problems including convection, turbulence, and non-Newtonian flow.

PROGRAM OUTCOMES:
☒ a ☒ b ☐ c ☒ d ☐ e ☒ f ☐ g ☐ h ☐ i ☒ j ☒ k

Degree Requirements: ⊙ Degree Requirement O Tech Elective O Core Course O Other O Free Elective

Prerequisites: Math 216 and MSE 220 or 250
O Enforced ⊙ Advised

Credit Restrictions:

Level of Credit: ☐ Undergrad only ☐ Rackham Grad ☐ Non-Rckhm Grad ☒ Ugrad or Rckhm Grad ☐ Ugrad or Non-Rckhm Grad ☐ All Credit types ☐ Rckhm Grad w/add'l Work

Credit Hours: Min 4 Max 4

Contact Hrs/Wk 4
Number of Wks 14

Printing Information (Optional): ☒ Print the course in the Bulletin ☒ Print the course in the Time Schedule

Terms & Freq. of Offering: ☐ I ■ II ☐ IIIa ☐ IIIb ☐ III ■ Yearly ☐ Alter Years ☐ Even Years ☐ Odd Years

Half term ☐ 1st ☐ 2nd

Cognizant Faculty Member: M. Falk, J. Kieffer, F. Filisko, T. Pollack — Title: Asst. Professor, Assoc. Professor, Professors

Grad Course: Attach nomination if Cognizant Faculty is not a regular graduate faculty

Approval

☐ Curriculum Comm. _____
☐ Faculty _____
☐ Rackham _____
☐ Cross listed Unit 1 _____
☐ Cross listed Unit 2 _____

Submitted By: ■ Home Dept. ☐ Cross-listed Dept.
Name, Signature & Department
Home Dept. John W. Halloran
Cross-listed Dept(s). _____

Form Number

1065

SUPPORTING STATEMENT

The Materials Science & Engineering Undergraduate Committee has accepted the changes to MSE 435 as proposed by the course cognizant faculty, and is hereby requesting the following modifications to MSE 435:

a more precise description of course content to better serve the needs of the students,

a correction to the term in which the course is taught, and

an update to the prerequisites because MSE 150 has been deleted.

Are any special resources or facilities required for this course? ☐ Yes ☒ No

Detail the Special requirements

Course Syllabus
MSE 435 Kinetics and Transport

Meeting Time: MTWF 8^{30}-9^{30} Dow 3150

Instructor: Michael Falk
Dow 2086
615-8086
mfalk@umich.edu

Office Hours: Mondays 4-5 and Tuesdays 1:30-2:30

Grader: Jessica Terbush, jterbush@umich.edu

Course Homepage: http://coursetools.ummu.umich.edu/2003/winter/matscie/435/001.nsf

The goal of this course is to provide you with a working knowledge of fundamental concepts regarding how materials heat, flow and mix. By the end of this class you should be able to use basic equations describing these phenomena to solve problems that are important to the design of materials processes. These include predicting flow in pipes, rates of heating and cooling and extents of mixing and inter-diffusion. The course will also seek to provide you with an understanding of the role that dimensionless quantities play in analyzing complex processes. This class will not present a holistic approach to the design of materials processes; rather it is meant to prepare you to develop these skills in MSE 489, Processing Design.

My assumption will be that you are taking this class in order to become a practicing materials engineer. Whether or not you pursue a career that directly involves materials processing you will need to have a thorough understanding of these topics. This course will provide you with the skills to identify important issues and communicate concerns effectively with colleagues regarding transport related phenomena. When interacting with the engineers that create your product these topics will be important for understanding how the properties of the material depend on how it was produced. When interacting with the engineers who use your product these topics will be important for understanding how operating conditions such elevated temperatures or aqueous environments affect material performance. These skills are also important for understanding the economics of materials manufacturing. Moving material from place to place, as well as cooling and heating are major factors in the energy cost to produce materials and, consequently, their economic viability in the marketplace.

Required Texts:

Brodkey and Hershey, "Transport Phenomena: A Unified Approach," McGraw-Hill © 1988, ISBN 0070079633, out of print, available as a course pack from Ulrich's Bookstore.

Porier and Geiger, "Transport Phenomena in Materials Processing," TMS, ISBN 0-87339-272-8, available for $39 to TMS student members via the TMS document center website: http://doc.tms.org

Suggested MATLAB Reference:

Hunt, Lipsman and Rosenberg, "A Guide to MATLAB for Beginners and Experienced Users," Cambridge University Press, ISBN 0521008594.

Grading: Will be based on weekly homework (40%), and three midterm exams (20% each).
NOTE: the third midterm will be given on the final exam date, April 25 from 8:30-10am.

Final grades will be curved to a B mean with ½ standard deviation per grade unit including +/- grades.

Tentative Schedule

See the course website for a detailed schedule including class topics and associated readings.

Week	Topics	Readings	Assignments/Exams
Jan6 - Jan10	Introduction, Quantities, Units, Heat/ Mass/ Momentum Analogy	BH 1-2.1	HW0 Due Jan10
Jan13 - Jan17	Heat, Mass, Momentum Transfer and Diffusivities	BH 2.2-2.6	HW1 Due Jan15
Jan20 - Jan24 (No class M-W)	Problem Solving		Meditate on the legacy of Dr. Martin Luther King, Jr.
Jan27 - Feb31 (Class Thursday)	One Dimensional Balance and Transport	BH 3.1-3.3	HW2 Due Jan29
Feb3 – Feb7 (Class Thursday)	Continuity, SteadyTransport	BH 3.4-3.6, 4.1-4.2	HW3 Due Feb5
Feb10 – Feb14 (Class Thursday)	Three Dimensional Transport	BH 5.1-5.2	HW4 Due Feb12
Feb17 – Feb21	Diffusion	BH 5.3, PG13	EXAM 1 Feb18 8am HW5 Due Feb21(Fri)
Feb24 – Feb28 (Spring Break)			Study Heat Transfer and Fluid Flow on a Sunny Ocean Beach
Mar3 – Mar7 (No Clases)			
Mar10 – Mar14 (Class Thursday)	Non-Newtonian Fluids Turbulence	BH 15, BH 6	HW6 Due Mar12
Mar17 – Mar21 (Class Thursday)	Radiation, Integral Analysis	PG 11.1-6, BH 7.1	HW7 Due Mar19
Mar24 – Mar28 (Class Thursday)	Fluid Statics, Dimensional Analysis, Duct Flow	BH 8, BH 10	HW8 Due Mar26
Mar31 – Apr4	Piping Systems	BH 10	Exam 2 Apr1 8am
Apr7 – Apr11	Transfer During Flow	BH 11, BH 12	HW9 Due Apr9
Apr14 – Apr16	Kinetic Theories	BH14	HW10 Due Apr16
Apr25	Exam		Exam3 Apr25

MSE 435

Course Description

Application of basic principles of molecular transport and mass, energy and momentum balance to the solution of heat, diffusion and fluid flow problems relevant to materials processing. Introduction to radiative heat transfer. Empirical approaches to and dimensional analysis of complex transport problems including convection, turbulence and non-Newtonian flow.

Course Objectives

1. To understand and be able to apply the basic equations of molecular transport (Fourier, Fick and Newton's Laws).
2. To utilize the equations of mass, energy and momentum balance to analyze transport problems.
3. To combine (1) and (2) above in solving problems in the presence and absence of convection.
4. To become familiar with the issues associated with turbulent flow and be able to utilize phenomenological approaches for analyzing turbulent flows.
5. To learn representative kinetic theories for calculating transport coefficients in solids, liquids and gases.
6. To understand the importance of dimensional analysis and the role of dimensionless quantities in determining transitions in physical behavior and quantifying empirically determined boundary conditions.

Course Topics

1. Systems of units
2. Balance laws: mass, species, momentum, thermal energy, mechanical energy
3. Application of balance laws to flow in pipes and tanks
4. Differential forms of balance laws
5. Constitutive laws for molecular transport: Fick's law, Fourier's law, Newton's law
6. Boundary conditions for transport problems
7. Combining balance, molecular transport and convection
8. Solving one-dimensional transport problems using differential equations
9. Solving higher dimensional transport problems using numerical methods
10. Deriving engineering (net) transport equations from microscopic equations
11. Radiative Heat Transfer: Stephan-Boltzmann Law, black bodies, gray bodies, view factors
12. Turbulent flow
13. Dimensional analysis and dimensionless parameters
14. Phenomenological transfer coefficients (heat, momentum, mass)
15. Nonlinear constitutive laws for transport; phenomenological non-Newtonian flow laws
16. Kinetic theories of transport: Chapman-Enskog Theory, Eyring Free Volume Theory, Debye Theory, theory of electronic thermal conduction

Course Outcomes

1. Students will be able to convert a transport problem into a set of differential equations for further analysis.
2. Students will be able to calculate the power requirements for a piping network given data for friction factors and loss coefficients.
3. Students will be able to use ordinary differential equations to determine how temperature and chemical composition vary with time in a simple reactor.
4. Students will be able to apply linear constitutive laws to calculate effective transfer coefficients through composite structures.
5. Students will be able to compute heat transfer between radiating bodies.
6. Students will be able to use kinetic theories of transport to compute the temperature dependence of transport coefficients.
7. Students will be able to express spatially dependent transport problems in terms of partial differential equations and solve these equations analytically in cases that can be reduced to one spatial dimension.
8. Students will be able to analyze one-dimensional solidification using partial differential equations in order to predict cooling rates and solidification times.
9. Students will be able to apply dimensional analysis to physical problems.
10. Students will be able to calculate dimensionless parameters associated with transport and use these to compute transfer coefficients
11. Students will be able to describe non-Newtonian behavior using phenomenological constitutive laws.

STEP II: Develop Course Objectives and Outcomes

COURSE #: MSE 435	COURSE TITLE: Kinetics and Transport in Materials Engineering
TERMS OFFERED: Winter	PREREQUISITES: : Math 216 and MSE 220 or 250
INSTRUCTOR(S): M. Falk	SCIENCE/DESIGN:4/0
CATALOG DESCRIPTION: Application of basic principles of molecular transport and mass, energy and momentum balance to the solution of heat, diffusion and fluid flow problems relevant to materials processing. Introduction to radiative heat transfer. Empirical approaches to and dimensional analysis of complex transport problems including convection, turbulence and non-Newtonian flow.	COURSE TOPICS: 1. Systems of units. 2. Balance laws: mass, species, momentum, thermal energy, mechanical energy. 3. Application of balance laws to flow in pipes and tanks. 4. Differential forms of balance laws. 5. Constitutive laws for molecular transport: Fick's law, Fourier's law, Newton's law. 6. Boundary conditions for transport problems. 7. Combining balance, molecular transport and convection. 8. Solving one-dimensional transport problems using differential equations. 9. Solving higher dimensional transport problems using numerical methods. 10. Deriving engineering (net) transport equations from microscopic equations. 11. Radiation: Stephan-Boltzmann Law, black bodies, gray bodies, view factors. 12. Turbulent flow. 13. Dimensional analysis and dimensionless parameters. 14. Phenomenological transfer coefficients (heat, momentum, mass). 15. Nonlinear constitutive laws for transport; phenomenological non-Newtonian flow laws. 16. Kinetic theories of transport: Chapman-Enskog Theory, Eyring Free Volume Theory, Debye Theory, theory of electronic thermal conduction.

COURSE OBJECTIVES*	1. To understand and be able to apply the basic equations of molecular transport (Fourier, Fick and Newton's Laws). 2. To utilize the equations of mass, energy and momentum balance to analyze transport problems. 3. To combine (1) and (2) above in solving problems in the presence and absence of convection. 4. To become familiar with the issues associated with turbulent flow and be able to utilize phenomenological approaches for analyzing turbulent flows. 5. To learn representative kinetic theories for calculating transport coefficients in solids, liquids and gases. 6. To understand the importance of dimensional analysis and the role of dimensionless quantities in determining transitions in physical behavior and quantifying empirically determined boundary conditions.
COURSE OUTCOMES*	1. Students will be able to convert a transport problem into a set of differential equations for further analysis. 2. Students will be able to calculate the power requirements for a piping network given data for friction factors and loss coefficients. 3. Students will be able to use ordinary differential equations to determine how temperature and chemical composition vary with time in a simple reactor. 4. Students will be able to apply linear constitutive laws to calculate effective transfer coefficients through composite structures. 5. Students will be able to compute heat transfer between radiating bodies. 6. Students will be able to use kinetic theories of transport to compute the temperature dependence of transport coefficients. 7. Students will be able to express spatially dependent transport problems in terms of partial differential equations and solve these equations analytically in cases that can be reduced to one spatial dimension. 8. Students will be able to analyze one-dimensional solidification using partial differential equations in order to predict cooling rates and solidification times. 9. Students will be able to apply dimensional analysis to physical problems. 10. Students will be able to calculate dimensionless parameters associated with transport and use these to compute transfer coefficients 11. Students will be able to describe non-Newtonian behavior using phenomenological constitutive laws.
ASSESSMENT TOOLS	1. Weekly homework. 2. Three exams.

THE UNIVERSITY OF MICHIGAN -- COLLEGE OF ENGINEERING
Course Approval Request
College Curriculum Committee, 1420 Lurie Engineering Center Building

Print

Form Number 1063

Action Requested

○ New Course
◉ Modification of Existing Course
○ Deletion of Course

Complete the following sections:
New Courses - B & C completely
Modifications - A modified information, B & C completely
Deletions - A & C completely

Date 2/17/2003
Effective Winter 2004

A. CURRENT LISTING

Home Department: Materials Science & Engineering | Div #: 281 | Course Number: 470

Cross Listed Course Information:

X Course Title: Advanced Physical Metallurgy

TITLE ABBREVIATION — Time Sched Max = 19 Spaces: Adv. Phys. Met. | Transcript Max = 20 Spaces: Adv. Phys. Met.

Course Description:
Phase transformations and hardening mechanisms in metallic systems. Nucleation, diffusion-controlled growth, spinodal decomposition and martensitic reactions. Strengthening mechanisms based on two phase microstructure thermal stability.

PROGRAM OUTCOMES:
☐ a ☐ b ☐ c ☐ d ☐ e ☐ f ☐ g ☐ h ☐ i ☐ j ☐ k

Degree Requirements O Degree Requirement O Tech Elective O Core Course O Other O Free Elective

Prerequisites: MSE 350 — O Enforced ⊙ Advised

Credit Restrictions:

Level of Credit
☐ Undergrad only ☐ All Credit types
☐ Rackham Grad ☐ Rckhm Grad w/add'l Work
☐ Non-Rckhm Grad
☒ Ugrad or Rckhm Grad
☐ Ugrad or Non-Rckhm Grad

Credit Hours: Min 3 Max 3
Contact Hrs/Wk 3
Number of Wks 14

C. Repeatability (Indi Research, Dir. Study, Dissertation:
Is this course repeatable? O Yes O No
Maximum Hours? ____ Maximum Times? ____
Can it be repeated in the same term? O Yes O No

Class Type(s) ☒ Lec ☐ Rec ☐ Sem ☐ Lab ☐ Dis ☐ Ind ☐ Other ____
Graded Section ⊙ Lec O Rec O Sem O Lab O Dis O Ind O Other
Grading ☒ A-E ☐ CR/NC ☐ S/U ☐ P/F ☐ Y
Location ☒ Ann Arbor ☐ Biological Station ☐ Camp Davis ☐ Extension

B. REQUESTED LISTING

Home Department: Materials Science & Engineering MATSCIE | Div #: 281 | Course Number: 470

Cross Listed Course Information:

Course Title: Physical Metallurgy

TITLE ABBREVIATION — Time Sched Max = 19 Spaces: Phys Met | Transcript Max = 20 Spaces: PHYS MET

Course Description for Official Publication (Max = 50 words)
Phase transformations and hardening mechanisms in metallic systems. Nucleation, diffusion-controlled growth, spinodal decomposition and martensitic reactions. Strengthening mechanisms based on two phase microstructure thermal stability.

PROGRAM OUTCOMES:
☒ a ☒ b ☐ c ☒ d ☐ e ☒ f ☐ g ☐ h ☐ i ☒ j ☒ k

Degree Requirements ⊙ Degree Requirement ⊙ Tech Elective O Core Course O Other O Free Elective

Prerequisites: MSE 350 — O Enforced ⊙ Advised

Credit Restrictions:

Level of Credit
☐ Undergrad only ☐ All Credit types
☐ Rackham Grad ☐ Rckhm Grad w/add'l Work
☐ Non-Rckhm Grad
☒ Ugrad or Rckhm Grad
☐ Ugrad or Non-Rckhm Grad

Credit Hours: Min 3 Max 3
Contact Hrs/Wk 3
Number of Wks 14

Printing Information (Optional) ☒ Print the course in the Bulletin ☒ Print the course in the Time Schedule

Terms & Freq. of Offering ☐ I ■ II ☐ IIIa ☐ IIIb ☐ III — ■ Yearly ☐ Alter Years ☐ Even Years ☐ Odd Years
Half term ☐ 1st ☐ 2nd

Cognizant Faculty Member: W. Hosford, T. Pollock, J. Halloran, W. Jones **Title** Professor

Grad Course: Attach nomination if Cognizant Faculty is not a regular graduate faculty

Approval
☐ Curriculum Comm. ____
☐ Faculty ____
☐ Rackham ____
☐ Cross listed Unit 1 ____
☐ Cross listed Unit 2 ____

Submitted By: ■ Home Dept. ☐ Cross-listed Dept.
Name, Signature & Department
Home Dept. MSE Dept- John W. Halloran
Cross-listed Dept(s). ____

Form Number

1063

SUPPORTING STATEMENT

The current title reflects an old connection to the junior-level companion course that has since changed titles.

Are any special resources or facilities required for this course? ☐ Yes ☒ No

Detail the Special requirements

THE UNIVERSITY OF MICHIGAN -- COLLEGE OF ENGINEERING
Course Approval Request
College Curriculum Committee, 1420 Lurie Engineering Center Building

Print

Form Number 1013

Action Requested

- (•) New Course
- ( ) Modification of Existing Course
- ( ) Deletion of Course

Complete the following sections:
New Courses - B & C completely
Modifications - A modified information, B & C completely
Deletions - A & C completely

Date 1/22/2003
Effective Winter 2004

A. CURRENT LISTING

Home Department | Div # | Course Number

Cross Listed Course Information

Course Title

TITLE ABBREVIATION
Time Sched Max = 19 Spaces
Transcript Max = 20 Spaces

Course Description

PROGRAM OUTCOMES:
☐ a ☐ b ☐ c ☐ d ☐ e ☐ f ☐ g ☐ h ☐ i ☐ j ☐ k

Degree Requirements
O Degree Requirement O Tech Elective
O Core Course O Other
O Free Elective

Prerequisites
O Enforced O Advised

Credit Restrictions

Level of Credit
☐ Undergrad only ☐ All Credit types
☐ Rackham Grad ☐ Rckhm Grad w/add'l Work
☐ Non-Rckhm Grad
☐ Ugrad or Rckhm Grad
☐ Ugrad or Non-Rckhm Grad

Credit Hours Min ____ Max ____
Contact Hrs/Wk ____
Number of Wks ____

C. Repeatability (Indi Research, Dir. Study, Dissertation:
Is this course repeatable? O Yes O No
Maximum Hours? ____ Maximum Times? ____
Can it be repeated in the same term? O Yes O No

Class Type(s)
☒ Lec ☐ Rec ☐ Sem ☐ Lab ☐ Dis ☐ Ind ☐ Other ____

Graded Section
⊙ Lec O Rec O Sem O Lab O Dis O Ind O Other

Grading
☒ A-E ☐ CR/NC ☐ S/U ☐ P/F ☐ Y

Location
☒ Ann Arbor ☐ Biological Station ☐ Camp Davis ☐ Extension

Approval
☐ Curriculum Comm. ____
☐ Faculty ____
☐ Rackham ____
☐ Cross listed Unit 1 ____
☐ Cross listed Unit 2 ____

B. REQUESTED LISTING

Home Department: Mechanical Engineering | Div #: 280 | Course Number: 513

Cross Listed Course Information
Automotive Engineering 513
Manufacturing 513

Course Title: Automotive Body Structures

TITLE ABBREVIATION
Time Sched Max = 19 Spaces: Autobody Structures
Transcript Max = 20 Spaces: Autobody Structures

Course Description for Official Publication (Max = 50 words)
Emphasis is on body concept for design using first order modeling of thin walled structural elements. Practical application of solid/structural mechanics is considered to design automotive bodies for global bending, torsion,vibration, crashworthiness, topology, material selection, packaging, and manufacturing constraints.

PROGRAM OUTCOMES:
☐ a ☐ b ☐ c ☐ d ☐ e ☐ f ☐ g ☐ h ☐ i ☐ j ☐ k

Degree Requirements
O Degree Requirement O Tech Elective
O Core Course O Other
O Free Elective

Prerequisites ME311
O Enforced ⊙ Advised

Credit Restrictions

Level of Credit
☐ Undergrad only ☒ All Credit types
☐ Rackham Grad ☐ Rckhm Grad w/add'l Work
☐ Non-Rckhm Grad
☐ Ugrad or Rckhm Grad
☐ Ugrad or Non-Rckhm Grad

Credit Hours Min 3 Max 3
Contact Hrs/Wk 3
Number of Wks 14

Printing Information (Optional)
☒ Print the course in the Bulletin
☒ Print the course in the Time Schedule

Terms & Freq. of Offering ☐ I ■ II ☐ IIIa ☐ IIIb ☐ III
■ Yearly ☐ Alter Years ☐ Even Years ☐ Odd Years
Half term ☐ 1st ☐ 2nd

Cognizant Faculty Member: Noboro Kikuchi **Title** Professor

Grad Course: Attach nomination if Cognizant Faculty is not a regular graduate faculty

Submitted By: ■ Home Dept. ☐ Cross-listed Dept.
Name, Signature & Department
Home Dept. Mech Engin
Cross-listed Dept(s). Automotive (Interpro)
Manufacturing

Form Number

THE UNIVERSITY OF MICHIGAN -- COLLEGE OF ENGINEERING
Course Approval Request
College Curriculum Committee, 1420 Lurie Engineering Center Building

Print

Form Number 1013

Action Requested

- (•) New Course
- ( ) Modification of Existing Course
- ( ) Deletion of Course

Complete the following sections:
New Courses - B & C completely
Modifications - A modified information, B & C completely
Deletions - A & C completely

Date 1/22/2003
Effective Winter 2004

A. CURRENT LISTING

Home Department | Div # | Course Number

Cross Listed Course Information

Course Title

TITLE ABBREVIATION
Time Sched Max = 19 Spaces
Transcript Max = 20 Spaces

Course Description

PROGRAM OUTCOMES:
☐ a ☐ b ☐ c ☐ d ☐ e ☐ f ☐ g ☐ h ☐ i ☐ j ☐ k

Degree Requirements
( ) Degree Requirement ( ) Tech Elective
( ) Core Course ( ) Other
( ) Free Elective

Prerequisites
( ) Enforced ( ) Advised

Credit Restrictions

Level of Credit
☐ Undergrad only ☐ All Credit types
☐ Rackham Grad ☐ Rckhm Grad w/add'l Work
☐ Non-Rckhm Grad
☐ Ugrad or Rckhm Grad
☐ Ugrad or Non-Rckhm Grad

Credit Hours Min Max
Contact Hrs/Wk
Number of Wks

C. Repeatability (Indi Research, Dir. Study, Dissertation:
Is this course repeatable? ( ) Yes ( ) No
Maximum Hours? Maximum Times?
Can it be repeated in the same term? ( ) Yes ( ) No

Class Type(s)
☒ Lec
☐ Rec
☐ Sem
☐ Lab
☐ Dis
☐ Ind
☐ Other

Graded Section
(•) Lec
( ) Rec
( ) Sem
( ) Lab
( ) Dis
( ) Ind
( ) Other

Grading
☒ A-E
☐ CR/NC
☐ S/U
☐ P/F
☐ Y

Location
☒ Ann Arbor
☐ Biological Station
☐ Camp Davis
☐ Extension

Approval
☐ Curriculum Comm.
☐ Faculty
☐ Rackham
☐ Cross listed Unit 1
☐ Cross listed Unit 2

B. REQUESTED LISTING

Home Department	Div #	Course Number
Mechanical Engineering	280	513

Cross Listed Course Information

Automotive Engineering	513
Manufacturing	513

Course Title: Automotive Body Structures

TITLE ABBREVIATION
Time Sched Max = 19 Spaces: Autobody Structures
Transcript Max = 20 Spaces: Autobody Structures

Course Description for Official Publication (Max = 50 words)
Emphasis is on body concept for design using first order modeling of thin walled structural elements. Practical application of solid/structural mechanics is considered to design automotive bodies for global bending, torsion,vibration, crashworthiness, topology, material selection, packaging, and manufacturing constraints.

PROGRAM OUTCOMES:
☐ a ☐ b ☐ c ☐ d ☐ e ☐ f ☐ g ☐ h ☐ i ☐ j ☐ k

Degree Requirements
( ) Degree Requirement ( ) Tech Elective
( ) Core Course ( ) Other
( ) Free Elective

Prerequisites ME311
( ) Enforced (•) Advised

Credit Restrictions

Level of Credit
☐ Undergrad only ☒ All Credit types
☐ Rackham Grad ☐ Rckhm Grad w/add'l Work
☐ Non-Rckhm Grad
☐ Ugrad or Rckhm Grad
☐ Ugrad or Non-Rckhm Grad

Credit Hours Min 3 Max 3
Contact Hrs/Wk 3
Number of Wks 14

Printing Information (Optional)
☒ Print the course in the Bulletin
☒ Print the course in the Time Schedule

Terms & Freq. of Offering ☐ I ■ II ☐ IIIa ☐ IIIb ☐ III
■ Yearly ☐ Alter Years ☐ Even Years ☐ Odd Years
Half term ☐ 1st ☐ 2nd

Cognizant Faculty Member: Noboro Kikuchi **Title** Professor

Grad Course: Attach nomination if Cognizant Faculty is not a regular graduate faculty

Submitted By: ■ Home Dept. ☐ Cross-listed Dept.

Name, Signature & Department
Home Dept. Mech Engin
Cross-listed Dept(s). Automotive (Interpro)
Manufacturing

Form Number

Form Number

1013

SUPPORTING STATEMENT

Course has been taught 4 times as a Topics course and through CPD. There is great interest from students both on campus and in industry. Enrollment has been consistently 30-50 on campus and 30-50 through CPD.

Are any special resources or facilities required for this course? ☒ Yes ☐ No

Detail the Special requirements

Special Software for Windows: CARS2000

Automotive Body Structures-ME599

Emphasis for this course will be on body concepting using first-order models. Body structure element behavior will be examined including thin walled members, panels, joints, spot welds, and local attachments. Structural models for the primary requirements will be analyzed in detail. These include global body bending, body torsion, and crashworthiness. Selection of structural topology will be covered, including packaging and manufacturing constraints and the need for trade analysis in selecting the best structure.

Professors & Staff

Donald Malen	dmalen@engin.umich.edu
Noboru Kikuchi	kikuchi@engin.umich.edu
Grad. Student Instructor: Adam Bonner	boneraa@umich.edu
Distance Learning Contact: Mike Henry	

Text Book

Course Pack — Dollar Bill Copying, Ann Arbor
(877) 738-9200
www.dollarbillcopying.com

Special Software Required for Windows

Section Analysis and body design manual: CARS2000 (Free)

Provided in Course Pack
++++Be sure to register (free) to use beyond 7 day trial period++++
Send email to **techsupport@deiusa.com**, include your name, company and home address plus site code to get an authorization number

Finite Element Modeler: FOA Software (or equivalent, e.g. ANSYS, NASTRAN)

FOA Software provided in class

Team Term Project

Criteria for Project Selection

Related to body engineering
Applies or develops a *First Order Model*
Applies the systems engineering approach: Requirements ⇒ Design Concept ⇒ Performance Estimate
Desirable-a work related problem

Grade based on

Oral Presentation in class at Ann Arbor (if possible). About 10 minutes on last two class sessions.
Written report

Submit one page proposal at Mid-term Exam:

Names: 2-3 people on team
Topic
What first order model is involved
What final result is desired, e.g. a design concept, development of an analytical model, development of a requirement, prediction of performance, correlation with test or Finite Element Model results.

Final Grade

Final Grade Weighting	
Mid-term	25%
Quiz	15%
5 Homework	25%
Project	35%
	100%

Fundamentals of Automobile Body Structure ME599 Winter 2003

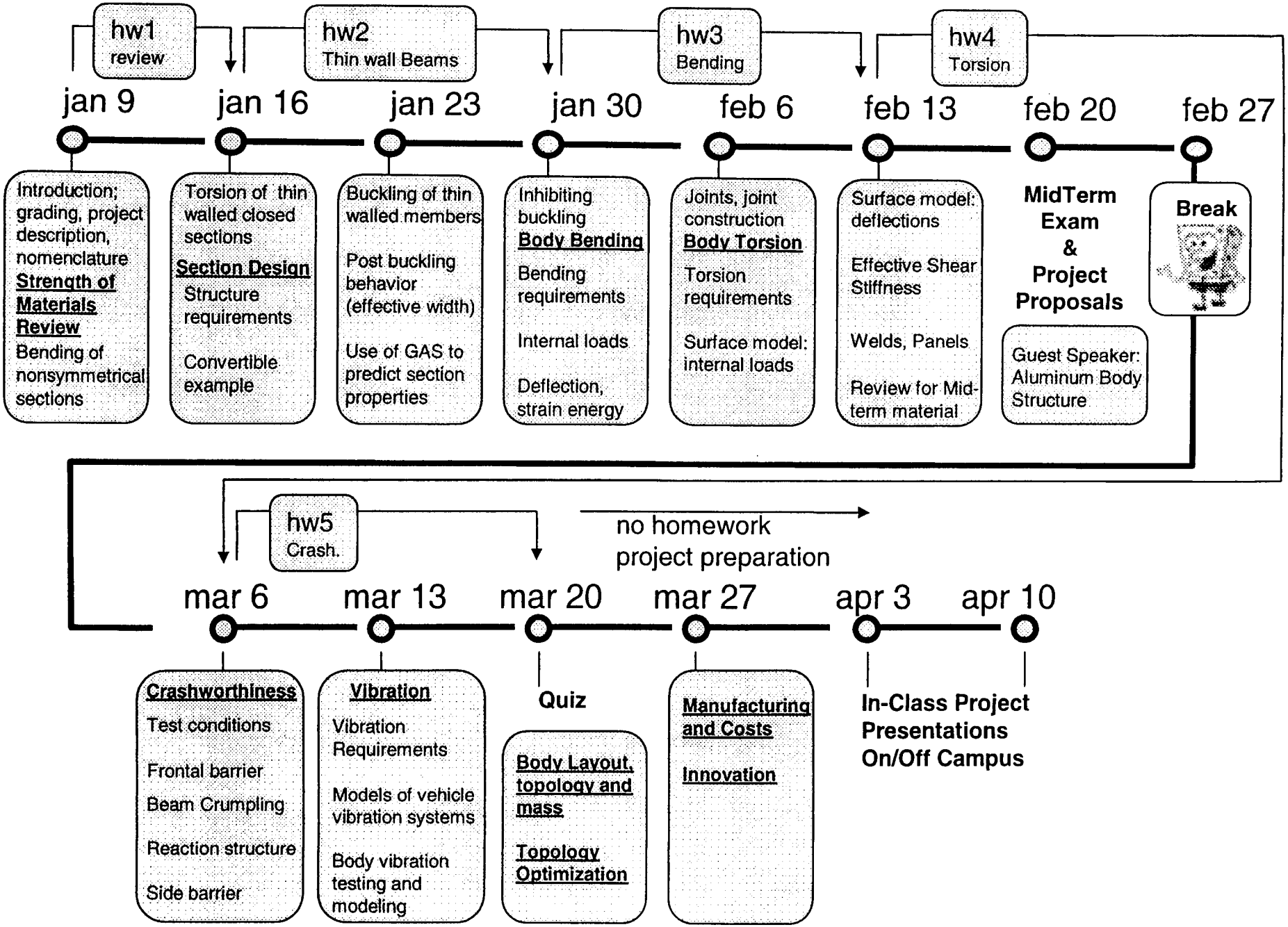

Steering column mount

Exercise 1.4

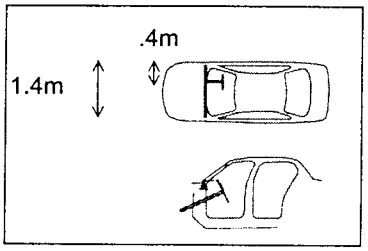

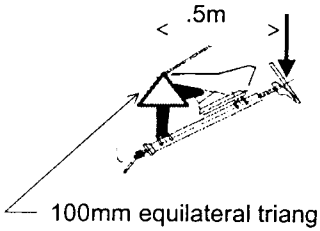

Narrow slit

100mm equilateral triangle, 1.5 mm

a) Determine deflection at point of load application under 1KN load with closed section

b) Determine deflection at point of load application under 1KN load with section with narrow slit(unrestrained warping)

© Donald E. Malen 1999

Steering column mount C section

Exercise 1.5

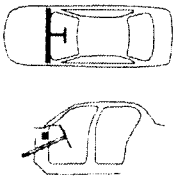

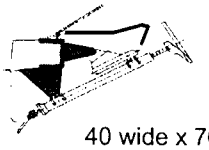

40 wide x 70 high x 2mm

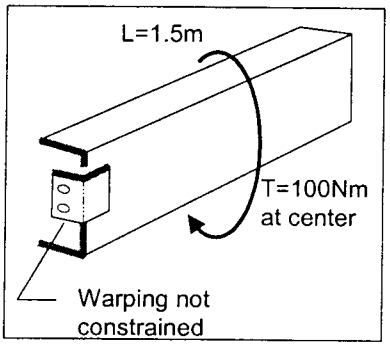

a) Determine stiffness for the above conditions

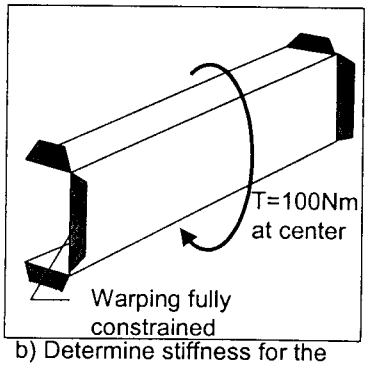

b) Determine stiffness for the above conditions, $C_w=4.3837x10^7mm^6$

© Donald E. Malen 1999

(c) Donald E. Malen

Buckling Stress for a Section Element — Exercise 1.12

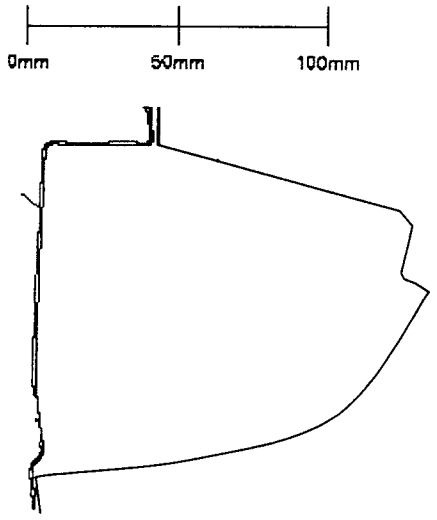

Consider the top flange of the Neon rocker. Treat each flange as an independent long, flat plate(ignore spot welds). Treat the edge conditions as shown.

a) Compute the stress at which it will buckle using hand calculations.

b) At what bending moment does a) occur?

© Donald E. Malen 1999

Rear Rail with Bumper Loading — Exercise 1.13

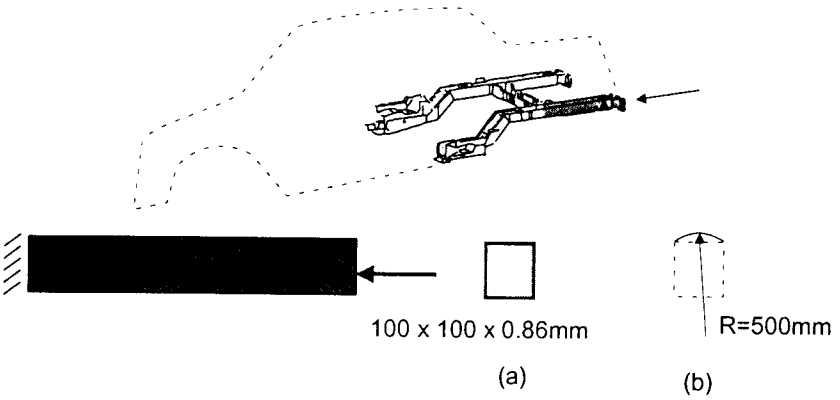

a) At what bumper load will the plate elements in the rear rail buckle?
b) All four flat sides of the section are replaced with curved elements of R=500mm which go through the corners of the original square section. Compute the new bumper load where the plate elements buckle.

© Donald E. Malen 1999

(c) Donald E. Malen

General Buckling Effective Width — Exercise 1.14

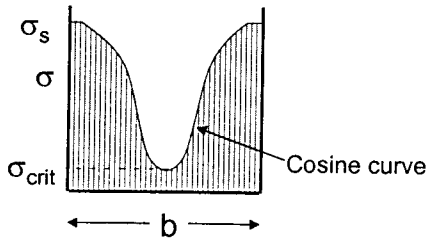

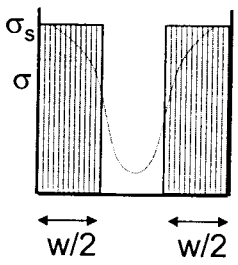

$$P = \int_0^b \sigma t dx \qquad P = \sigma_s w t$$

a) Assume the stress is distributed in a cosine function with the maximum stress σ_s and minimum stress σ_{crit} as shown above. Determine the effective width assuming the maximum stress acts uniformly over the effective width w and both elements react the same force P.

$$w(\sigma_s) = \frac{b}{2}\left(1 + \frac{\sigma_{crit}}{\sigma_s}\right)$$

b) Plot the effective width w versus the maximum stress-to-critical stress ratio.
c) For a flat plate with simply supported edges where b=100mm and t=.86mm, plot the effective width versus applied compressive stress.

© Donald E. Malen 1999

Effective Width — Exercise 1.15

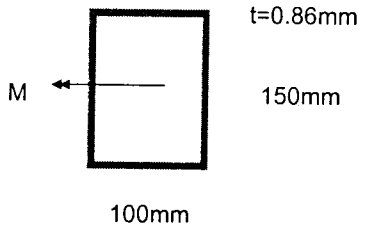

Using hand calculations,
a) At what bending moment, M_{crit}, will top cap just buckle?
b) What is the effective width of the top cap at 1.1 σ_{crit} , 1.5 σ_{crit} , 2.0 σ_{crit} ?
c) What is the effective I_{xx} at 2.0 σ_{crit} ?
d) What is the moment at which the effective section is at yield?

© Donald E. Malen 1999

THE UNIVERSITY OF MICHIGAN -- COLLEGE OF ENGINEERING
Course Approval Request
College Curriculum Committee, 1420 Lurie Engineering Center Building

Print

Form Number **866**

Action Requested

- ○ New Course
- ⊙ Modification of Existing Course
- ○ Deletion of Course

Complete the following sections:
New Courses - B & C completely
Modifications - A modified information, B & C completely
Deletions - A & C completely

Date 2/13/2002
Effective Winter 04

A. CURRENT LISTING

	Home Department	Div #	Course Number
X	Mechanical Engineering	280	583
	Cross Listed Course Information		
	Industrial & operations Engineering	272	583
	Manufacturing	275	583
	EECS	252	566

☒ Course Title: Scientific Basis for Reconfigurable Manufacturing

TITLE ABBREVIATION		
	Time Sched Max = 19 Spaces	Reconfig Mfg.
	Transcript Max = 20 Spaces	Recon Mfg.

☐ Course Description

PROGRAM OUTCOMES:
☐ a ☐ b ☐ c ☐ d ☐ e ☐ f ☐ g ☐ h ☐ i ☐ j ☐ k

Degree Requirements ○ Degree Requirement ○ Tech Elective ○ Core Course ○ Other ○ Free Elective

☐ Prerequisites Graduate standing or permission of instructor ○ Enforced ⊙ Advised

☐ Credit Restrictions

☐ **Level of Credit**
☐ Undergrad only ☐ Rackham Grad ☐ Non-Rckhm Grad ☐ Ugrad or Rckhm Grad ☐ Ugrad or Non-Rckhm Grad
☐ All Credit types ☐ Rckhm Grad w/add'l Work

Credit Hours Min 3 Max 3
Contact Hrs/Wk 3
Number of Wks 14

B. REQUESTED LISTING

	Home Department	Div #	Course Number
	Mechanical Engineering	280	583
	Cross Listed Course Information		
	Industrial Operations Engineering	272	583
	Manufacturing	275	583

Course Title: Scientific Basis for Reconfigurable Manufacturing

TITLE ABBREVIATION		
	Time Sched Max = 19 Spaces	Sci Basis Reconf Mfg
	Transcript Max = 20 Spaces	Sci Basis Reconf Mfg

Course Description for Official Publication (Max = 50 words)
Principles of reconfigurable manufacturing systems (RMS). Students will be introduced to fundamental theories applicable to RMS synthesis and analysis. Concepts of customization, intagratability, modularity, diagnosability, and convertability. Reconfiguration design theory, life-cycle economics, open architecture principles, controller configuration, system reliability, multi-sensor monitoring, and stream of variations. Term projects.

PROGRAM OUTCOMES:
☐ a ☐ b ☐ c ☐ d ☐ e ☐ f ☐ g ☐ h ☐ i ☐ j ☐ k

Degree Requirements ○ Degree Requirement ○ Tech Elective ○ Core Course ○ Other ○ Free Elective

Prerequisites Graduate standing or permission of instructor ○ Enforced ⊙ Advised

Credit Restrictions

Level of Credit
☐ Undergrad only ☐ Rackham Grad ☐ Non-Rckhm Grad ☐ Ugrad or Rckhm Grad ☐ Ugrad or Non-Rckhm Grad
☒ All Credit types ☐ Rckhm Grad w/add'l Work

Credit Hours Min 3 Max 3
Contact Hrs/Wk 3
Number of Wks 14

C.

Repeatability (Indi Research, Dir. Study, Dissertation:
Is this course repeatable? ○ Yes ○ No
Maximum Hours? ____ Maximum Times? ____
Can it be repeated in the same term? ○ Yes ○ No

Printing Information (Optional) ☐ Print the course in the Bulletin ☐ Print the course in the Time Schedule

☐ **Class Type(s)** ☒ Lec ☐ Rec ☐ Sem ☒ Lab ☐ Dis ☐ Ind ☐ Other ____

Graded Section ⊙ Lec ○ Rec ○ Sem ○ Lab ○ Dis ○ Ind ○ Other

Grading ☒ A-E ☐ CR/NC ☐ S/U ☐ P/F ☐ Y

Location ☒ Ann Arbor ☐ Biological Station ☐ Camp Davis ☐ Extension

Terms & Freq. of Offering ☐ I ■ II ☐ IIIa ☐ IIIb ☐ III
☐ Yearly ■ Alter Years ☐ Even Years ☐ Odd Years
Half term ☐ 1st ☐ 2nd

Cognizant Faculty Member: E. Kannatey-Asibu Title

Grad Course: Attach nomination if Cognizant Faculty is not a regular graduate faculty

Approval
☐ Curriculum Comm.
☐ Faculty
☐ Rackham
☐ Cross listed Unit 1

Submitted By: ☐ Home Dept. ■ Cross-listed Dept.
Name, Signature & Department
Home Dept. ME ~~Volker Sick~~ DUTTA
Cross-listed Dept(s). EECS Atul Prakash,
MFG Deba Dutta
IOE Larry Seiford
Home Kaul on behalf of Tech

☐ Cross listed Unit 2

Form Number

866

SUPPORTING STATEMENT

EECS no longer has faculty who participate in the teaching of this course.

Are any special resources or facilities required for this course? ☐ Yes ☐ No

Detail the Special requirements

THE UNIVERSITY OF MICHIGAN -- COLLEGE OF ENGINEERING
Course Approval Request
College Curriculum Committee, 1420 Lurie Engineering Center Building

Print

Form Number
866

Action Requested

○ New Course
◉ Modification of Existing Course
○ Deletion of Course

Complete the following sections:
New Courses - B & C completely
Modifications - A modified information, B & C completely
Deletions - A & C completely

Date 2/13/2002
Effective Fall 2002

A. CURRENT LISTING

	Home Department	Div #	Course Number
X	Mechanical Engineering	280	583

Cross Listed Course Information

Industrial & operations Engineering	272	583
Manufacturing	275	583
EECS	252	566

Course Title: Scientific Basis for Reconfigurable Manufacturing

TITLE ABBREVIATION		
	Time Sched Max = 19 Spaces	Reconfig Mfg.
	Transcript Max = 20 Spaces	Recon Mfg.

Course Description
Principles of reconfigurable manufacturing systems (RMS). Students will be introduced to fundamental theories applicable to RMS synthesis and analysis. Concepts of customization, intagratability, modularity, diagnosability, and convertability. Reconfiguration design theory, life-cycle economics, open architecture principles, controller configuration, system reliability, multi-sensor monitoring, and stream of variations. Term projects.

PROGRAM OUTCOMES:
☐ a ☐ b ☐ c ☐ d ☐ e ☐ f ☐ g ☐ h ☐ i ☐ j ☐ k

Degree Requirements ○ Degree Requirement ○ Tech Elective ○ Core Course ○ Other ○ Free Elective

Prerequisites: Graduate standing or permission of instructor ○ Enforced ⊙ Advised

Credit Restrictions

Level of Credit
☐ Undergrad only ☐ All Credit types
☒ Rackham Grad ☐ Rckhm Grad w/add'l Work
☒ Non-Rckhm Grad
☐ Ugrad or Rckhm Grad
☐ Ugrad or Non-Rckhm Grad

Credit Hours: Min 3 Max 3
Contact Hrs/Wk 3
Number of Wks 14

C. Repeatability (Indi Research, Dir. Study, Dissertation:
Is this course repeatable? ○ Yes ○ No
Maximum Hours? ____ Maximum Times? ____
Can it be repeated in the same term? ○ Yes ○ No

Class Type(s): ☒ Lec ☐ Rec ☐ Sem ☒ Lab ☐ Dis ☐ Ind ☐ Other ____
Graded Section: ⊙ Lec ○ Rec ○ Sem ○ Lab ○ Dis ○ Ind ○ Other _____
Grading: ☒ A-E ☐ CR/NC ☐ S/U ☐ P/F ☐ Y
Location: ☒ Ann Arbor ☐ Biological Station ☐ Camp Davis ☐ Extension

B. REQUESTED LISTING

	Home Department	Div #	Course Number
	Mechanical Engineering		583

Cross Listed Course Information

Industrial Operations Engineering		583
Manufacturing		583

Course Title: Scientific Basis for Reconfigurable Manufacturing

TITLE ABBREVIATION		
	Time Sched Max = 19 Spaces	Reconfig Mfg.
	Transcript Max = 20 Spaces	Recon Mfg.

Course Description for Official Publication (Max = 50 words)
Principles of reconfigurable manufacturing systems (RMS). Students will be introduced to fundamental theories applicable to RMS synthesis and analysis. Concepts of customization, intagratability, modularity, diagnosability, and convertability. Reconfiguration design theory, life-cycle economics, open architecture principles, controller configuration, system reliability, multi-sensor monitoring, and stream of variations. Term projects.

PROGRAM OUTCOMES:
☐ a ☐ b ☐ c ☐ d ☐ e ☐ f ☐ g ☐ h ☐ i ☐ j ☐ k

Degree Requirements ○ Degree Requirement ○ Tech Elective ○ Core Course ○ Other ○ Free Elective

Prerequisites: Graduate standing or permission of instructor ○ Enforced ⊙ Advised

Credit Restrictions

Level of Credit
☐ Undergrad only ☐ All Credit types
☒ Rackham Grad ☐ Rckhm Grad w/add'l Work
☐ Non-Rckhm Grad
☐ Ugrad or Rckhm Grad
☐ Ugrad or Non-Rckhm Grad

Credit Hours: Min 3 Max 3
Contact Hrs/Wk 3
Number of Wks 14

Printing Information (Optional) ☐ Print the course in the Bulletin ☐ Print the course in the Time Schedule

Terms & Freq. of Offering: ☐ I ■ II ☐ IIIa ☐ IIIb ☐ III ☐ Yearly ■ Alter Years ☐ Even Years ☐ Odd Years
Half term ☐ 1st ☐ 2nd

Cognizant Faculty Member: E. Kannatey-Asibu **Title** ____

Grad Course: Attach nomination if Cognizant Faculty is not a regular graduate faculty

Approval
☐ Curriculum Comm. _____
☐ Faculty _____
Rackham
☐ Cross listed Unit 1 _____
☐ Cross listed Unit 2 _____

Submitted By: ☐ Home Dept. ■ Cross-listed Dept.
Name, Signature & Department
Home Dept. _____
Cross-listed Dept(s). _____

THE UNIVERSITY OF MICHIGAN -- COLLEGE OF ENGINEERING
Course Approval Request
College Curriculum Committee, 1420 Lurie Engineering Center Building

Print

Form Numbe 1067

Action Requested

○ New Course
◉ Modification of Existing Course
○ Deletion of Course

Complete the following sections:
New Courses - B & C completely
Modifications - A modified information, B & C completely
Deletions - A & C completely

Date 2/19/2003
Effective Fall 2003

A. CURRENT LISTING

	Home Department	Div #	Course Number
X	Naval Architecture and Marine Engineering	294	420

Cross Listed Course Information

AOSS	241	420
ENSCEN	260	420

Course Title

TITLE ABBREVIATION — Time Sched Max = 19 Spaces:
Transcript Max = 20 Spaces:

Course Description

PROGRAM OUTCOMES:
☐ a ☐ b ☐ c ☐ d ☐ e ☐ f ☐ g ☐ h ☐ i ☐ j ☐ k

Degree Requirements: ○ Degree Requirement ○ Core Course ○ Free Elective ○ Tech Elective ○ Other

Prerequisites: ○ Enforced ○ Advised

Credit Restrictions

Level of Credit
☐ Undergrad only ☐ Rackham Grad ☐ Non-Rckhm Grad ☐ Ugrad or Rckhm Grad ☐ Ugrad or Non-Rckhm Grad
☐ All Credit types ☐ Rckhm Grad w/add'l Work

Credit Hours Min: Max:
Contact Hrs/Wk:
Number of Wks:

C.
Repeatability (Indi Research, Dir. Study, Dissertation:
Is this course repeatable? ○ Yes ◉ No
Maximum Hours? Maximum Times?
Can it be repeated in the same term? ○ Yes ○ No

Class Type(s) ☒ Lec ☐ Rec ☐ Sem ☐ Lab ☐ Dis ☐ Ind ☐ Other
Graded Section ◉ Lec ○ Rec ○ Sem ○ Lab ○ Dis ○ Ind ○ Other
Grading ☒ A-E ☐ CR/NC ☐ S/U ☐ P/F ☐ Y
Location ☒ Ann Arbor ☐ Biological Station ☐ Camp Davis ☐ Extension

Approval
☐ Curriculum Comm. _____
☐ Faculty _____
☐ Rackham _____
☐ Cross listed Unit 1 _____
☐ Cross listed Unit 2 _____

B. REQUESTED LISTING

	Home Department	Div #	Course Number
	Naval Architecture and Marine Engineering	294	420

Cross Listed Course Information

AOSS	241	420
ENSCEN	260	420
CEE	249	420

Course Title: Environmental Ocean Dynamics

TITLE ABBREVIATION — Time Sched Max = 19 Spaces: Env Ocean Dyn
Transcript Max = 20 Spaces: ENV OCEAN DYN

Course Description for Official Publication (Max = 50 words)
Physical conditions and physical processes of the oceans; integration of observations into comprehensive descriptions and explanations of oceanic phenomena. Emphasis on numerical wave and current prediction, optical and acoustical properties of sea water, currents, tides, waves and pollutant transport.

PROGRAM OUTCOMES:
☒ a ☒ b ☐ c ☐ d ☒ e ☒ f ☐ g ☒ h ☐ i ☒ j ☒ k

Degree Requirements: ○ Degree Requirement ○ Core Course ○ Free Elective ○ Tech Elective ○ Other

Prerequisites: NA 320 or AOSS 305 or CEE 325
○ Enforced ◉ Advised

Credit Restrictions

Level of Credit
☐ Undergrad only ☐ Rackham Grad ☐ Non-Rckhm Grad ☐ Ugrad or Rckhm Grad ☐ Ugrad or Non-Rckhm Grad
☒ All Credit types ☐ Rckhm Grad w/add'l Work

Credit Hours Min: 4 Max: 4
Contact Hrs/Wk: 4
Number of Wks: 14

Printing Information (Optional) ☒ Print the course in the Bulletin ☒ Print the course in the Time Schedule

Terms & Freq. of Offering: ■ I ☐ II ☐ IIIa ☐ IIIb ☐ III ■ Yearly ☐ Alter Years ☐ Even Years ☐ Odd Years
Half term ☐ 1st ☐ 2nd

Cognizant Faculty Member: Guy A. Meadows **Title** Professor

Grad Course: Attach nomination if Cognizant Faculty is not a regular graduate faculty

Submitted By: ■ Home Dept. ☐ Cross-listed Dept.

Name, Signature & Department

Home Dept.	Armin Troesch	NAME
Cross-listed Dept(s).	~~Roland Grayson~~ Perry Samson	AOSS
	Walt Weber	ENSCEN
	N. Katopodes	CEE

Form Number

1067

SUPPORTING STATEMENT

This course discusses ocean waves and currents and as such is germane to the recently invigorated CEE department's coastal engineering thrust area. Therefore cross-listing this course so that CEE students can register for it as CEE 420 is appropriate. Faculty from both departments are capable of teaching this course.

Are any special resources or facilities required for this course? ☐ Yes ☐ No

Detail the Special requirements